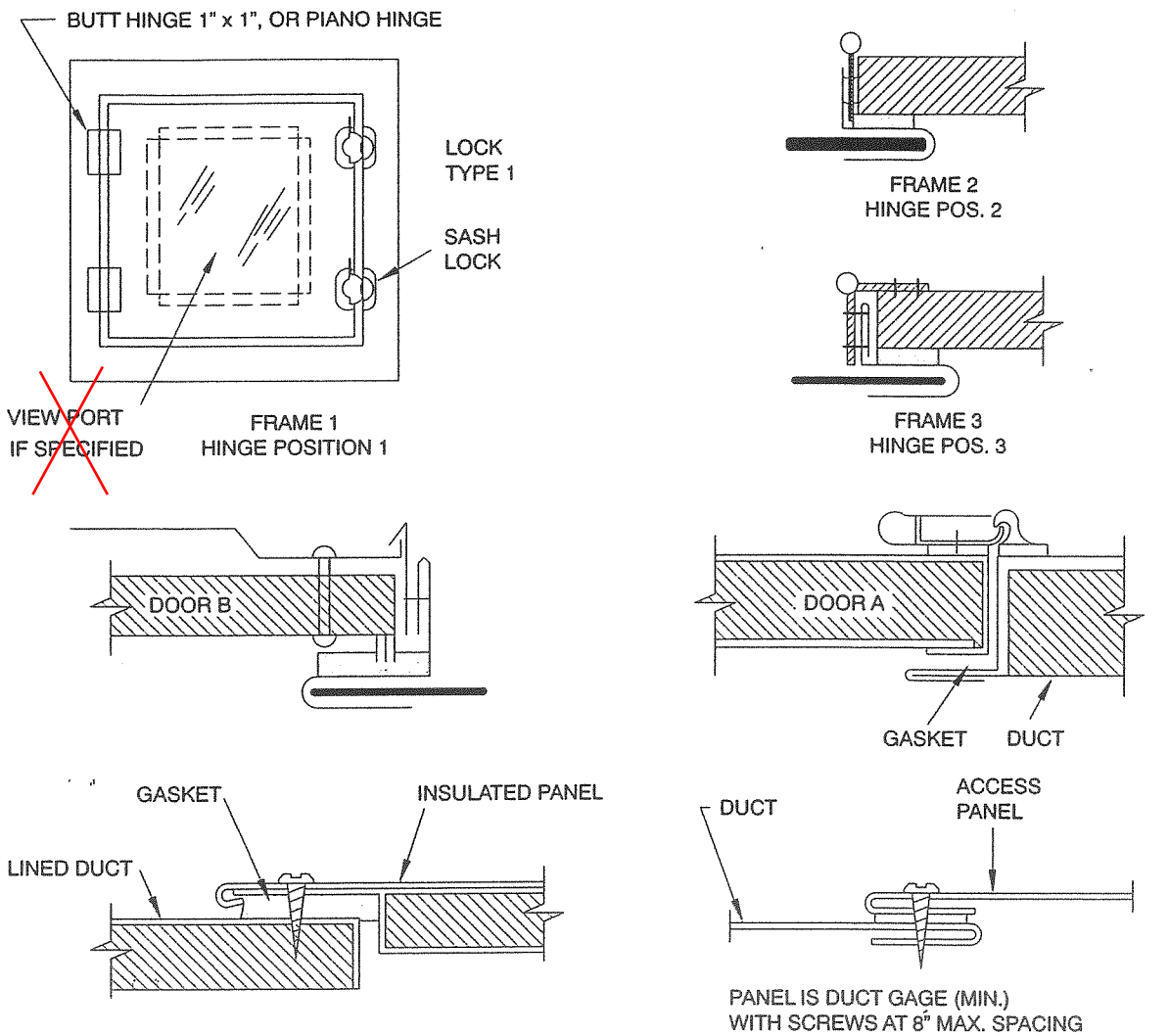

	Door Size	No. Hinges	No. Locks	Metal Gage		
				Frame	Door	Back
2" w.g. Static and Less	12" x 12" 16" x 20" 24" x 24"	2 2 3	1-S 2-S 2-S	24 22 22	26 24 22	26 26 26
3" w.g. Static	12" x 12" 16" x 20" 24" x 24"	2 2 3	1-S 1-S,1-T,1-B 2-S,1-T,1-B	22 20 20	22 20 20	26 26 24
4" w.g. to 10" w.g.	12" x 12" 16" x 20" 24" x 24"	2 3 3	1-S,1-T,1-B 2-S,1-T,1-B 2-S,2-T,2-B	20 20 18	20 18 18	26 24 24
S = Side opposite hinges, T = Top, B = Bottom						

CONSTRUCTION AND AIRTIGHTNESS MUST BE SUITABLE FOR THE DUCT PRESSURE CLASS USED. THESE ILLUSTRATIONS DO NOT PRECLUDE THE USE OF OTHER METHODS AND HARDWARE.

FIGURE 7-2 DUCT ACCESS DOORS AND PANELS