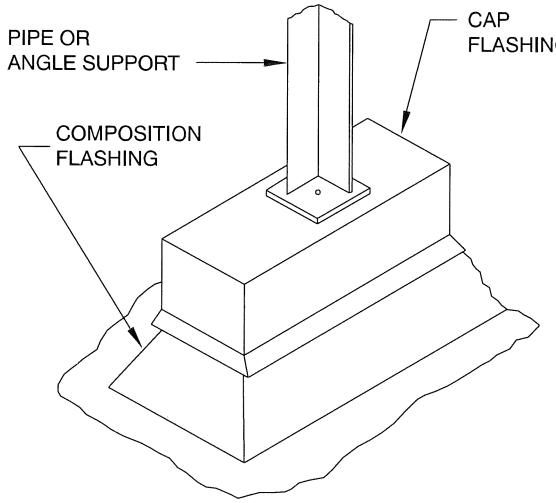

PIER OR CURB BASE

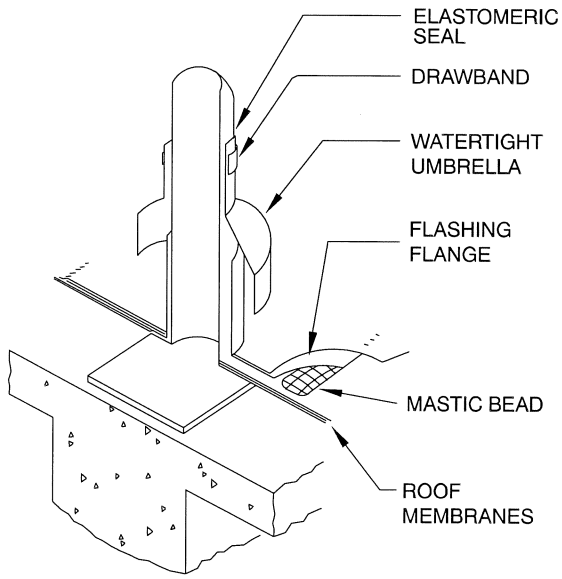

CONCRETE DECK

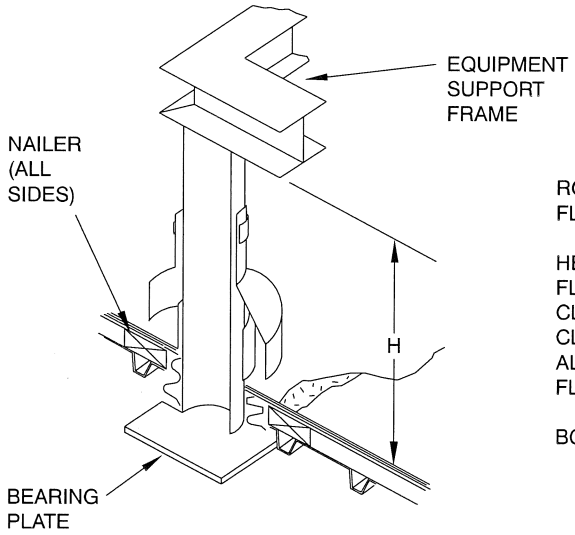

INSULATED STEEL DECK

ROOF JACK
FLASHING REQUIREMENTS

HEIGHT: 8" (203 mm) MIN. ABOVE ROOF
FLANGE: 3" TO 4" (76 mm TO 102 mm) WIDTH
CLEARANCE TO PIPE: 1/4" (6.4 mm) MIN.
CLEARANCE TO UMBRELLA: 1/4" (6.4 mm) MIN.
ALL ARE SET IN MASTIC AND STRIPPED IN.
FLANGE IS FASTENED TO WOOD NAILER ON INSULATED DECKS.
BOTTOM OF UMBRELLA TO BE 4" (102 mm) BELOW TOP OF FLASHING.

WIDTH OF EQUIPMENT	HEIGHT H
UP TO 24" (610 mm)	14" (356 mm)
25" TO 36" (635 mm TO 914 mm)	18" (457 mm)
37" TO 48" (940 mm TO 1219 mm)	24" (610 mm)
49" TO 60" (1245 mm TO 1524 mm)	30" (762 mm)
61" (1549 mm) AND WIDER	48" (1219 mm)

H CLEARANCE FOR ROOF MAINTENANCE IS RECOMMENDED FOR EQUIPMENT AND DUCTS.

FIGURE 6–4 EQUIPMENT AND DUCT SUPPORT FLASHING